FRONTIER

Single and twin product dispensing range for retail and commercial applications

- ✓ **Reliable**
- ✓ **Flexible and adaptable**
- ✓ **Value for money**

Commercial and industrial fuel dispensing solutions

GILBARCO VEEDER-ROOT

FRONTIER FUEL DISPENSER

Single and twin product dispensing range for retail and commercial applications

Compact and robust, the Frontier Europe is designed for optimum strength. Features strong hydraulics for operations in extreme environments, with complete flexibility on different flow rates and configurations.

The Frontier Europe is also bio-fuel and ethanol compatible, secure and has a proprietary interface and meter encoder. The perfect solution for both retail and commercial applications.

✓ Reliable

The Frontier dispenser offers a quality construction with a robust structure for optimum strength. Powder coated, galvanised steel metal panels protect the dispenser against all weather conditions and scratches. We ensure durability of our products by using best in class components across all of Gilbarco Veeder-Root's dispenser ranges, along with Elaflex hoses and nozzles.

✓ Flexible and adaptable

The Frontier dispenser offers complete flexibility with different flow rates, hose configurations and bio-fuels compatibility. With proven, state-of-the-art electronics it supports all leading communication protocols and is compatible with most Fleet Management systems and Gilbarco Veeder-Root's V Meter and Ecometer. It also offers ATC, VR, EVR, Ultra High Flow, Biofuels and satellite connection.

✓ Value for money

The Frontier dispenser uses a secure, proprietary interface and meter encoder for additional security. With ergonomic hose management, superior integrated and backlit display along with ease of maintenance, the Frontier dispenser offers ease of handling and low total cost of ownership.

Technical Specifications

Standard features

- 1 or 2 Grade with up to 4 hoses and 4 displays (2 fuelling positions)
- Combi LCD displays with LED and dedicated PPUs
- Petrol, Diesel, E15 and Biodiesel (100%)
- Gilbarco pumping unit and piston meter with e-calibration
- Powder coated galvanised steel
- Elaflex hanging hardware
- Pipe hook
- Stainless steel cover around nozzle boot
- Secure Interface Pulser

Options

- High flow (70 lpm) and ultra high flow (120 lpm / 200 lpm)
- 40/70 speed select button
- Low temperature hose and nozzles
- Optional heater for below -20°C
- Stainless steel hose mast and front panels
- Enhanced corrosion protection
- E85
- 10 button cash protection and volume preset keypad
- Ecometer
- Vapour recovery and monitoring
- Automatic temperature compensation
- Satellite connection for ultra high flow models
- Nozzle boot locks
- 7 digit electro mechanical non-resettable totalisers
- Volume display for commercial sites

FRONTIER	
Motor 3 phase:	400V, 50Hz/ 60Hz
Motor 1 phase:	220V-240V, 50Hz/60Hz
STP:	230V, 50Hz/60Hz, max. Load Current 1A
Meter:	Gilbarco Veeder-Root HD Meter
Electronics:	Gilbarco Apollo
Communication protocols:	Supports IFSF, 2-Wire, Pumalan, ER3, ATCL and multiwire protocols
Power failures:	15 minute display hold in case of power failure
Environmental:	-20 C to + 45 C, up to +55 C optional
Approvals:	ATEX, MID and CE
Flow rate:	High flow (70 lpm) and ultra high flow (120lpm / 200lpm)

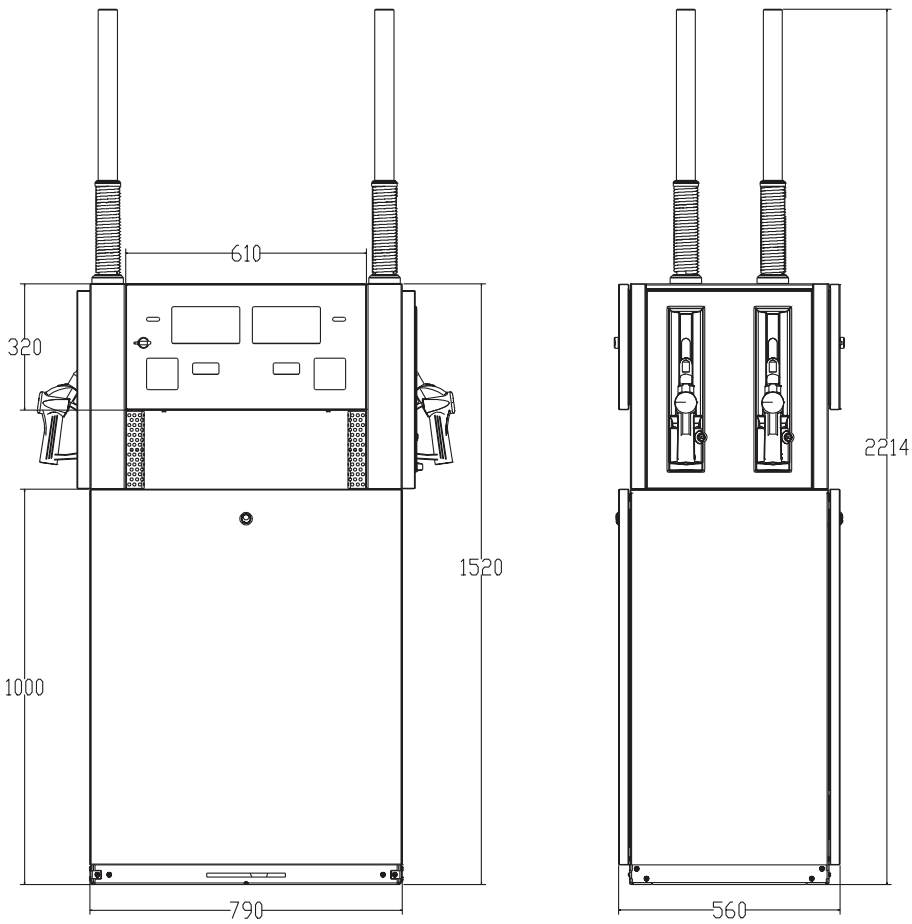

Fuelling the future, today.

Our 150 years' experience in the fuelling industry means we understand your business' fuelling needs better than anyone else.

Gilbarco Veeder-Root stands for quality, innovation and seamless integration and we are ready to help you transform your business.

To find out more about the Frontier or any of our industry leading fuelling technologies speak to your relationship manager or visit our website.

Email: euenquiries@gilbarco.com
Website: www.gilbarco.com/eu

GILBARCO VEEDER-ROOT

Document Version 4.0